INSTRUMENT APPROACH CHART - ICAO

AD ELEV 13
HEIGHTS RELATED TO THR RWY 16R - ELEV 13

DOHA RADAR NORTH	121.10 / 121.625	DOHA DIRECTOR WEST	123.875 / 119.225
DOHA RADAR SOUTH	120.675 / 119.15	HAMAD TWR WEST	118.025 / 118.225
DOHA APP EAST	124.775 / 120.60		
DOHA APP WEST	119.725 / 125.125		

DOHA/Hamad Intl. (OTHH)
ILS RWY16R CAT II & III
ACFT CAT A B C D

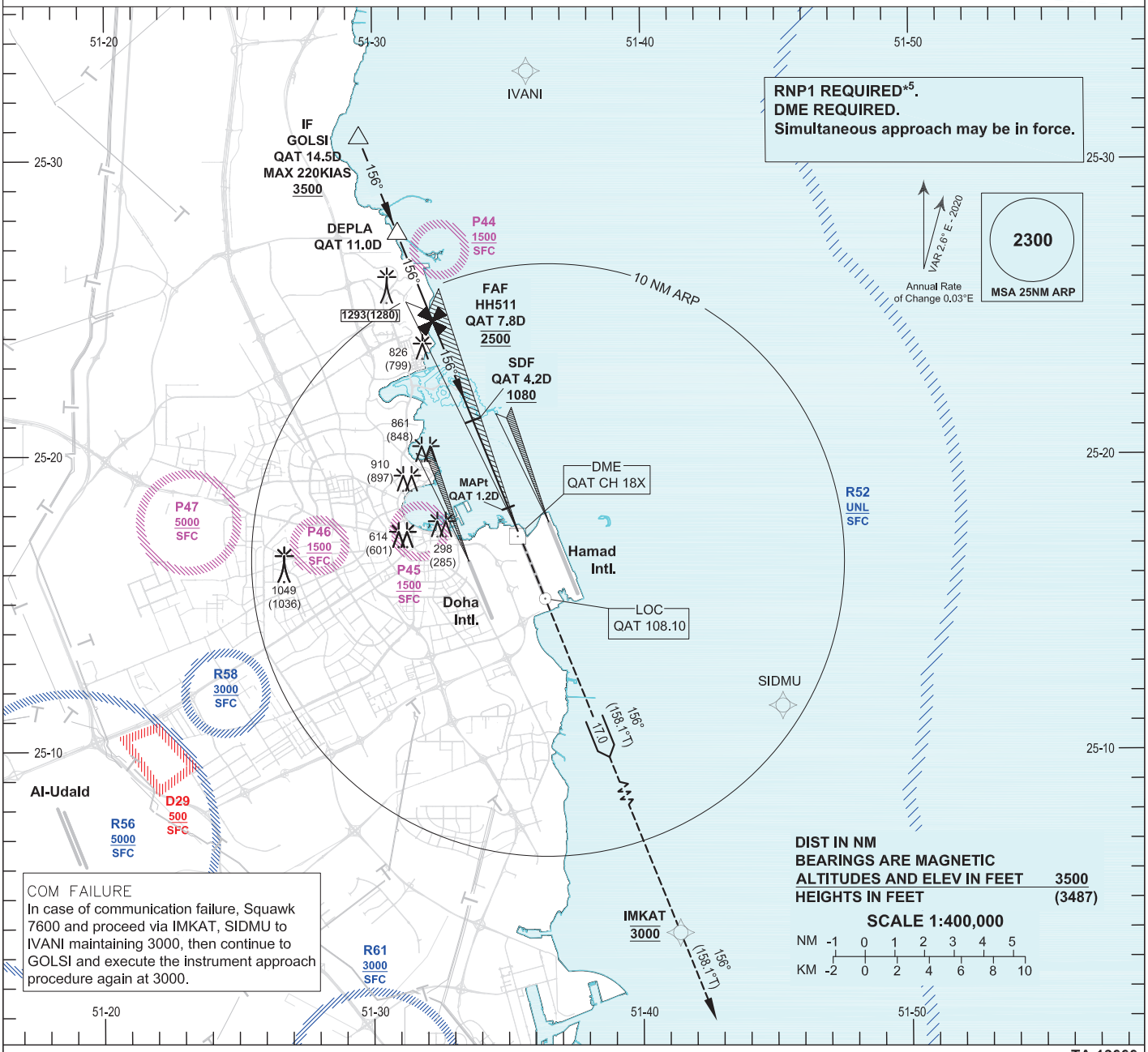

COM FAILURE
In case of communication failure, Squawk 7600 and proceed via IMKAT, SIDMU to IVANI maintaining 3000, then continue to GOLSI and execute the instrument approach procedure again at 3000.

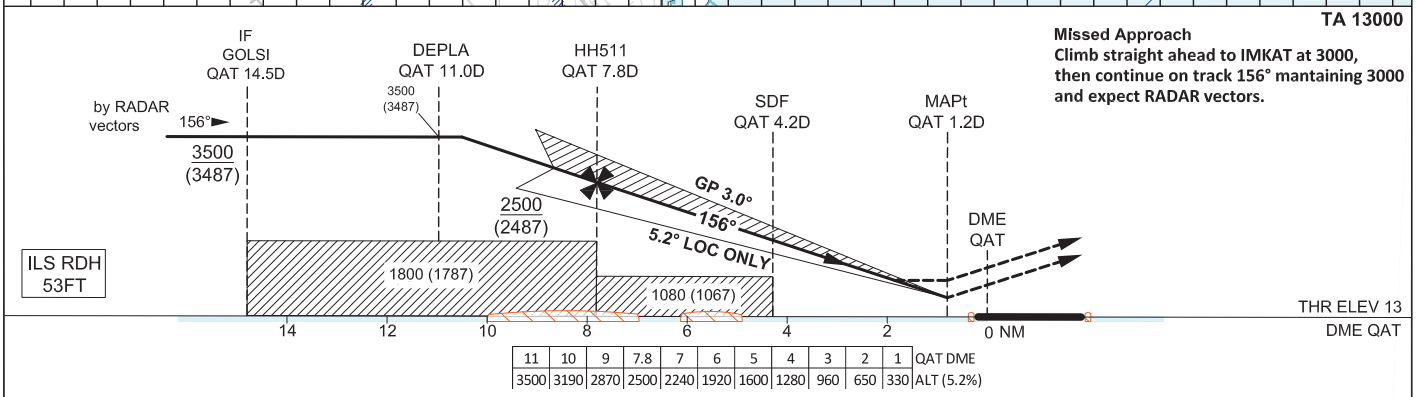

QAT DME	11	10	9	7.8	7	6	5	4	3	2	1
ALT (5.2%)	3500	3190	2870	2500	2240	1920	1600	1280	960	650	330

OCA (OCH)		A	B	C	D
Straight in Approach	ILS CAT I	183 (170)	196 (183)	213 (200)	228 (215)
	ILS CAT II	84 (71)	96 (83)	114 (101)	135 (122)
	LOC ONLY	370 (357)			
Circling		620 (607)		1310 (1297)	

1. QAT DME Zero Ranged to TDZ.
2. Expect RADAR vectors to establish on final approach course at GOLSI (IF).
3. Expect Glide Path intercept at DEPLA at 3500 (3487).
4. CAT IIIA and CAT IIIB Approved.
5. *RNP 1 required in the Missed Approach.
6. In case of Missed Approach inform ATC immediately.

LOC ONLY Approach: MAPt at QAT 1.2D

Speed	KT	80	100	120	140	160	180
Time	MIN:SEC	Timing Not Authorized					
RATE OF DESCENT	FT/MIN	420	530	640	740	850	960

Change: New procedure.